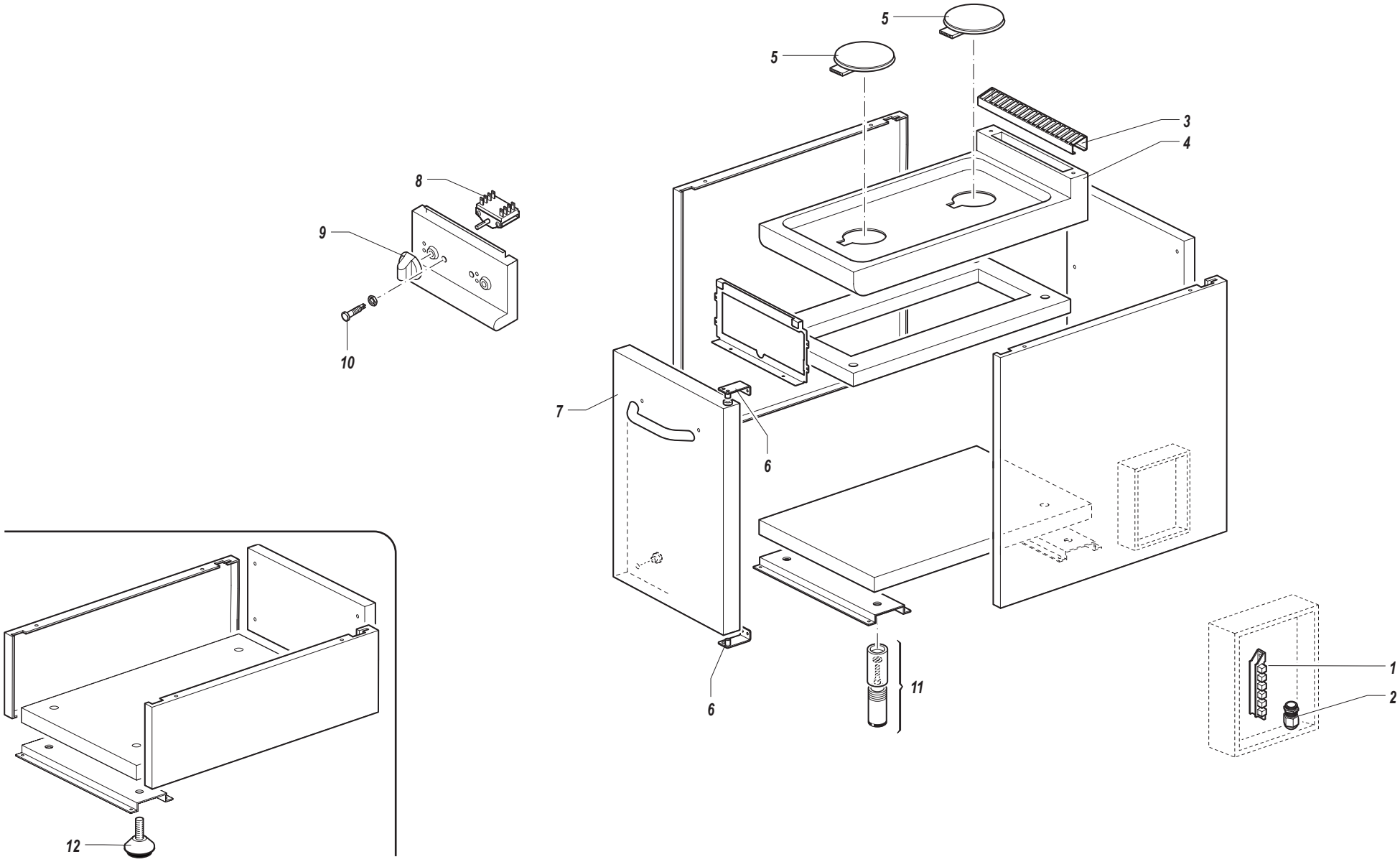
5
5
3
4
8
9
10
7
6
6
11
1
2
12

RIF.	CODICE	R.C.	DENOMINAZIONE	DESCRIPTION	BESCHREIBUNG	DESIGNATION	DENOMINACIONES
1	14/99900750		MORSETTIERA A 6 POLI	6 POLE TERMINAL	SECHSPOLIGER KLEMMENBRETT	TERMINALE 6 POLES	TERMINAL DE CONEXION 6 POLOS
2	14/99902079		PRESSACAVO PG21	FLAT FAIRLEAD PG21	KABELDURCHFÜHRUNG	PASSE-CABLE PG21	PROTECTOR DE CABLE PG21
3	23/99900404		GRIGLIA SCARICO FUMI	FLUES GRILL	ABGASGITTER	GRILLE FUMEE	REJILLA SALIDA HUMOS
4	WD/99603809		PIANO SUPERIORE	TOP	OBERE FLÄCHE	PLATEAU	PLANO SUPERIOR
5	07/99600049	*	PIASTRA ELETTRICA	ELECTRIC PLATE	ELEKTRISCHE PLATTE	PLAQUE DE CUISSON ELECTRIQUE	PLACA DE COCCION ELECTRICA
6	80-R0000060		CERNIERA PORTA	FIXING ELEMENT FOR DOOR	TÜRSCHARNIER	CHARNIERE POUR PORTE	BISAGRA DE LA PUERTA
7	WP/99600140		PORTA	DOOR	TÜR	PORTE	PUERTA
8	09/99900069	*	COMMUTATORE TERMOSTATO	SWITCH	SCHALTER	COMMUTATEUR	COMMUTADOR
9	29/99901139	*	MANOPOLA CUCINA ELETTRICA	KNOB FOR ELECTRIC COOKER	KNEBEL FÜR ELEKTRISCHE HERD	POIGNEE POUR CUISINIERE ELECTRIQUE	POMO PARA COCINA ELECTRICA
10	14/99901620		SPIA VERDE	GREEN WARNING LIGHT	GRÜNE LAMPE	LUMIERE VERTE	LUZ VERDE
11	15/99901801		PIEDINO REGOLABILE	ADJUSTABLE FOOT	EINSTELLBARER FUSS	PIED REGLABLE	PATA REGULABLE
12	15/99600160		PIEDINO REGOLABILE DA BANCO	ADJUSTABLE FOOT BENCH MODEL	EINSTELLBARER FUSS AUFTISCHMODELL	PIED REGLABLE POUR MODELE A POSER	PATA REGULABLE MODELO DE SOBREMESA