E7-FRE2 V17

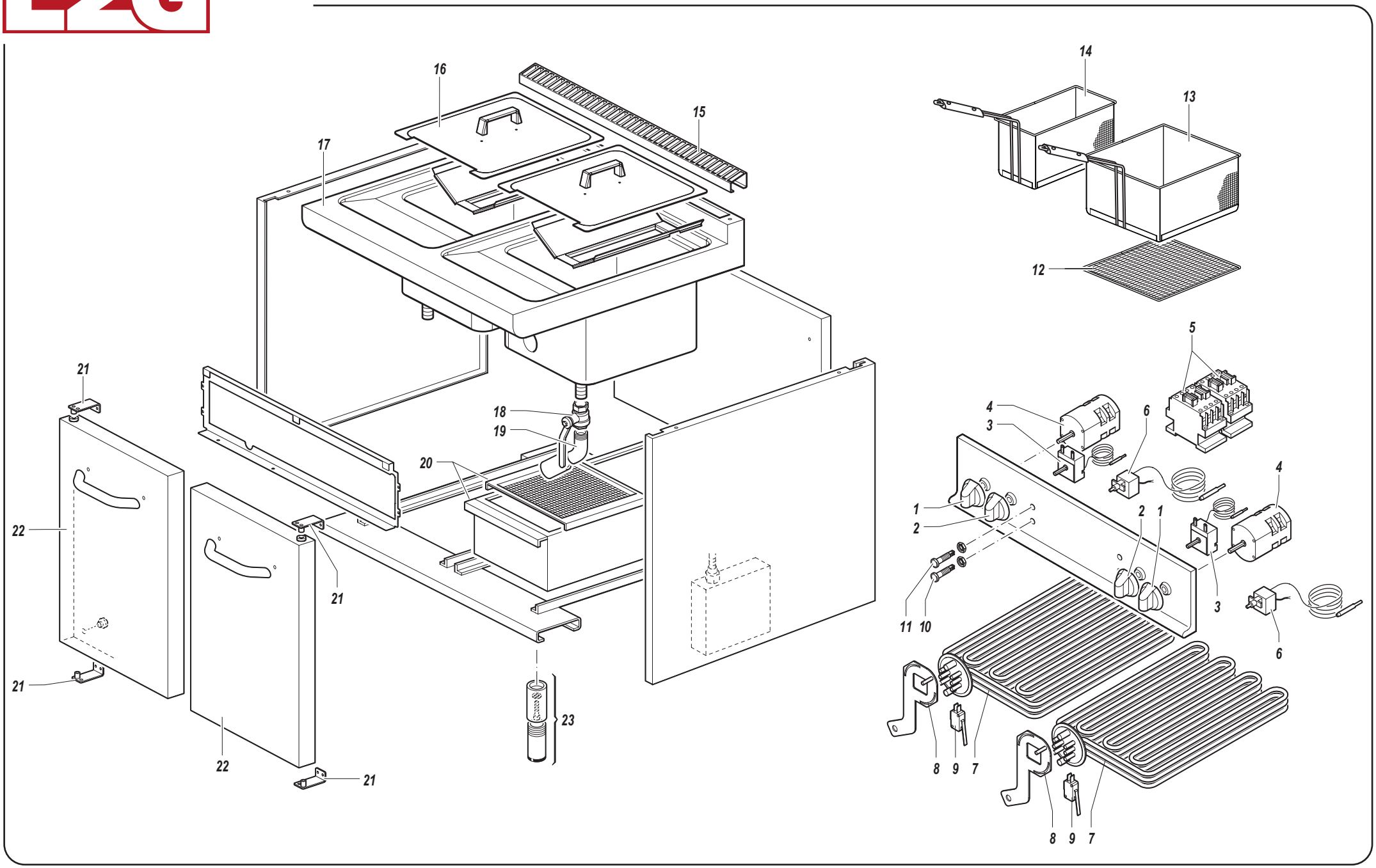

E7-FRE2 V17

RIF.	CODICE	R.C.	DENOMINAZIONE	DESCRIPTION	BESCHREIBUNG	DESIGNATION	DENOMINACIONES
1	29/99901129		MANOPOLA NERA	BLACK KNOB	SCHWARZER KNEBEL	POIGNEE NOIRE	POMO NEGRO
2	29/99901039		MANOPOLA PER FRIGGITRICE ELETTRICA	KNOB FOR ELECTRIC FRYER	KNEBEL FÜR ELEKTRISCHE FRITTEUSE	POIGNEE POUR FRITEUSE ELECTRIQUE	POMO PARA FREIDORA ELECTRICA
3	08/99600050		TERMOSTATO DI LAVORO	WORK THERMOSTAT	ARBEITSTHERMOSTAT	THERMOSTAT DE TRAVAIL	TERMOSTATO DE TRABAJO
4	10/99900160		INTERRUTTORE GENERALE	SWITCH	SCHALTER	INTERRUPTEUR	INTERRUPTOR
5	10/16520200	*	TELERUTTORE	CONTRACTOR	FERNSCHALTER	TELERUPTEUR	TELERRUPTOR
6	08/99600040	*	TERMOSTATO DI SICUREZZA	SAFETY THERMOSTAT	SICHERHEITSTHERMOSTAT	THERMOSTAT DE SECURITE	TERMOSTATO DE SEGURIDAD
7	07/99600069		RESISTENZA	RESISTOR	RESISTOR	RESISTANCE	RESISTENCIA
8	10/99600002		LEVA MOVIMENTO RESISTENZA	MOVING RESISTOR LEVER	RESISTORBEWEGUNG HEBEL	LEVIER POUR LA MOVIMENTATION DE LA RESISTANCE	PALANCA PARA EL MOVIMIENTO DE LA RESISTENCIA
9	10/99600001		MICROINTERRUTTORE	MICROSWITCH	MIKROSCHALTER	MICRO-INTERRUPTEUR	MICROINTERRUPTOR
10	14/99901621		SPIA ARANCIONE	ORANGE WARNING LIGHT	ORANGE LAMPE	LUMIERE ORANGE	LUZ NARANJA
11	14/99901620		SPIA VERDE	GREEN WARNING LIGHT	GRÜNE LAMPE	LUMIERE VERTE	LUZ VERDE
12	21/99600142		GRIGLIA FERMA RESIDUI	GRILL TO STOP THE WASTE	FILTERNETZ	RESEAU POUR RESIDUES	PARRILLA PARA DETENER A LOS RESIDUOS
13	21/99600134	*	CESTELLO 1/1	BASKET 1/1	KORB 1/1	PANIER 1/1	CESTA 1/1
14	21/99600133	*	CESTELLO 1/2	BASKET 1/2	KORB 1/2	PANIER 1/2	CESTA 1/2
15	23/99900804		GRIGLIA SCARICO FUMI	FLUES GRILL	ABGASGITTER	GRILLE FUMEE	REJILLA SALIDA HUMOS
16	23/99601180		COPERCHIO	LID	DECKEL	COUVERCLE	TAPA
17	WD/99603879		PIANO COMPLETO DI VASCA	TOP COMPLETE WITH SINK	FLÄCHE MIT BECKEN	PLAN AVEC CUVE	PLAN CON CUBA
18	14/99700024		RUBINETTO A SFERA	DRAIN VALVE	ABLASSHAHN	VALVE RONDE	VALVULA DE ESFERA
19	15/99902369		RACCORDO A 45°	45° PIPE FITTING	ROHRVERBINDUNG 45°	RACCORD DE TUYAU A 45°	CONEXION A 45°
20	WD/99600001		BACINELLA RACCOGLIOLIO E TELAIO FILTRO OLIO	OIL COLLECTION BOX WITH FILTER	BECKEN FÜR FETT UND ÖLFILTERGEHÄUSE	BAC DE RECUPERATION HUILE AVEC FILTRE	BANDEJA Y CAJA FILTRE
21	80-R0000060		CERNIERA PORTA	FIXING ELEMENT FOR DOOR	TÜRSCHARNIER	CHARNIERE POUR PORTE	BISAGRA PARA PUERTA
22	WP/99600140		PORTA	DOOR	TÜR	PORTE	PUERTA
23	15/99901801		PIEDINO REGOLABILE	ADJUSTABLE FOOT	EINSTELLBARER FUSS	PIED REGLABLE	PIE REGULABLE

* PRIMA DOTAZIONE DI RICAMBI CONSIGLIATI • FIRST RECOMMENDED SPARE PARTS LIST • ERSTE AUSRÜSTUNG ANGERATENER ERSATZTEILEN • PREMIERE DOTATION PIECES DETACHEES RECOMMANDEES • PRIMERA DOTACION DE REPUESTOS ACONSEJADOS