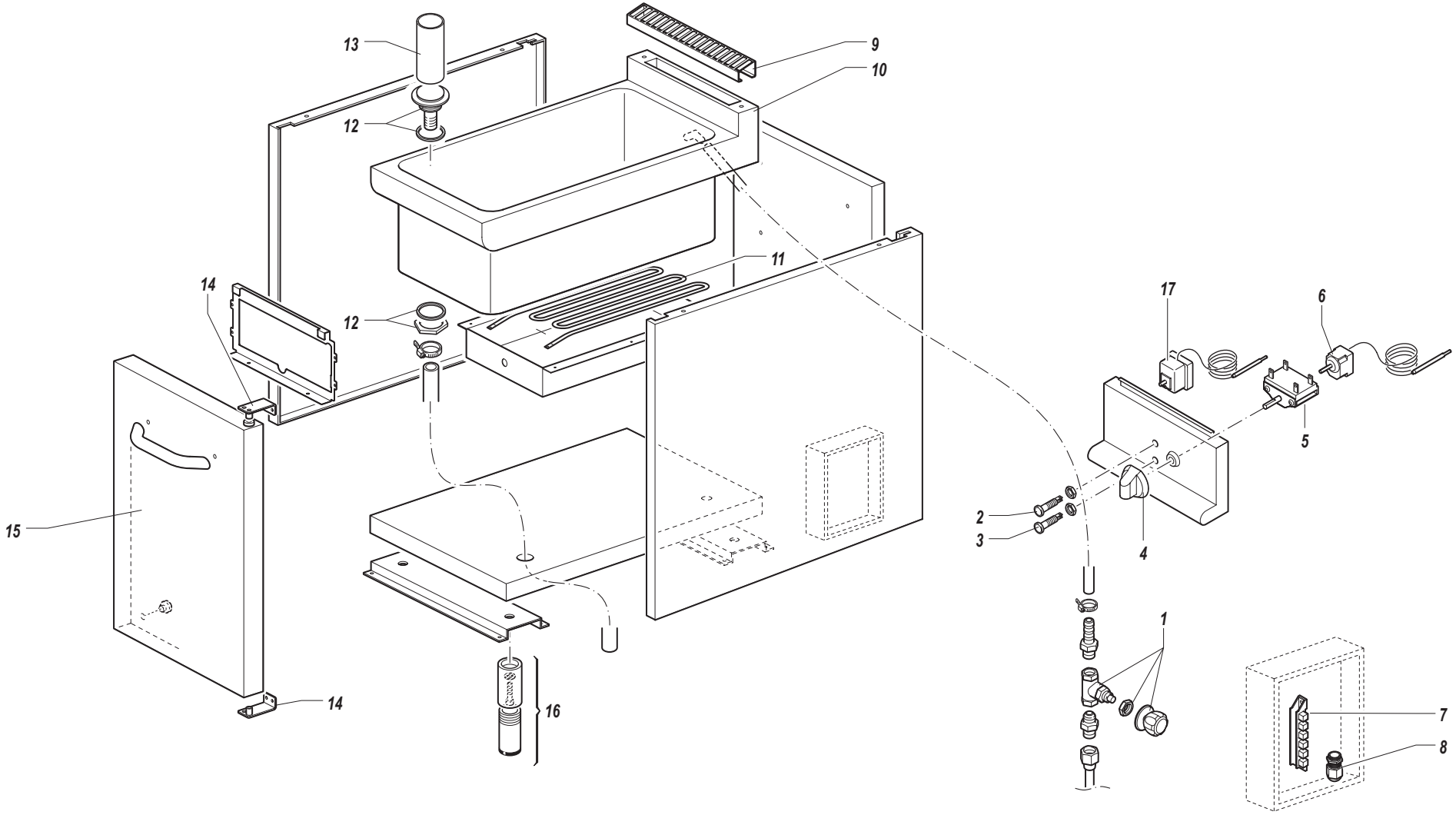
13
9
10
12
11
14
12
17
6
5
15
2
3
4
1
14
16
7
8

RIF.	CODICE	R.C.	DENOMINAZIONE	DESCRIPTION	BESCHREIBUNG	DESIGNATION	DENOMINACIONES
1	25/99900219		RUBINETTO INCASSO	BUILT IN WATER TAP	EINGEBAUTER WASSERHAHN	ROBINET ENCASTRABLE	GRIFO
2	14/99901620		SPIA VERDE	GREEN WARNING LIGHT	GRÜNE LAMPE	LUMIERE VERTE	LUZ VERDE
3	14/99901621		SPIA ARANCIONE	ORANGE WARNING LIGHT	ORANGE LAMPE	LUMIERE ORANGE	LUZ NARANJA
4	29/99901009	*	MANOPOLA NERA	BLACK KNOB	SCHWARZER KNEBEL	POIGNEE NOIRE	POMO NEGRO
5	09/16520049	*	COMMUTATORE TERMOSTATO	THERMOSTAT SWITCH	SCHALTER FÜR THERMOSTAT	COMMUTATEUR POUR THERMOSTAT	CONMUTADOR PARA TERMOSTATO
6	08/99900149	*	TERMOSTATO DI LAVORO	WORK THERMOSTAT	ARBEITSTHERMOSTAT	THERMOSTAT DE TRAVAIL	TERMOSTATO DE TRABAJO
7	14/99900749		MORSETTIERA A 3 POLI	3 POLE TERMINAL	DREIPOLIGER KLEMMENBRETT	TERMINALE 3 POLES	TERMINAL DE CONEXION 3 POLOS
8	14/99902079		PRESSACAVO PG21	FLAT FAIRLEAD PG21	KABELFÜHRUNG PG21	PASSE-CABLE PG21	PROTECTOR DE CABLE PG21
9	23/99900404		GRIGLIA SCARICO FUMI	FLUES GRILL	ABGASGITTER	GRILLE FUMEE	REJILLA SALIDA HUMOS
10	WD/99601549		PIANO COMPLETO DI VASCA	TOP COMPLETE WITH SINK	FLÄCHE KOMPLETT MIT BECKEN	PLAN AVEC CUVE	PLAN CON CUBA
11	07/99600029	*	RESISTENZA	RESISTOR	RESISTOR	RESISTANCE	RESISTENCIA
12	14/99700422		PILETTA 3/4	3/4 EXTENSION REDUCTION	VERLÄNGERUNG 3/4	EXTENSION 3/4	EXTENSION 3/4
13	18/99000621		TROPPO PIENO LAVELLO	BASIN OVERFLOW	ÜBERLAUFROHR BECKEN	TROP-PLEIN CUVE	REBOSE CUBA
14	80-R0000060		CERNIERA PORTA	FIXING ELEMENT FOR DOOR	TÜRSCHARNIER	CHARNIERE POUR PORTE	BISAGRA PARA PUERTA
15	WP/99600140		PORTA	DOOR	TÜR	PORTE	PUERTA
16	15/99901801		PIEDINO REGOLABILE	ADJUSTABLE FOOT	EINSTELLBARER FUSS	PIED REGLABLE	PIE REGULABLE
17	08/99600069	*	TERMOSTATO DI SICUREZZA	SAFETY THERMOSTAT	SICHERHEITSTHERMOSTAT	THERMOSTAT DE SECURITE	TERMOSTATO DE SEGURIDAD